3 611 B4A 000
Issue / Stand 13-10-11

Fig./Abb. 1

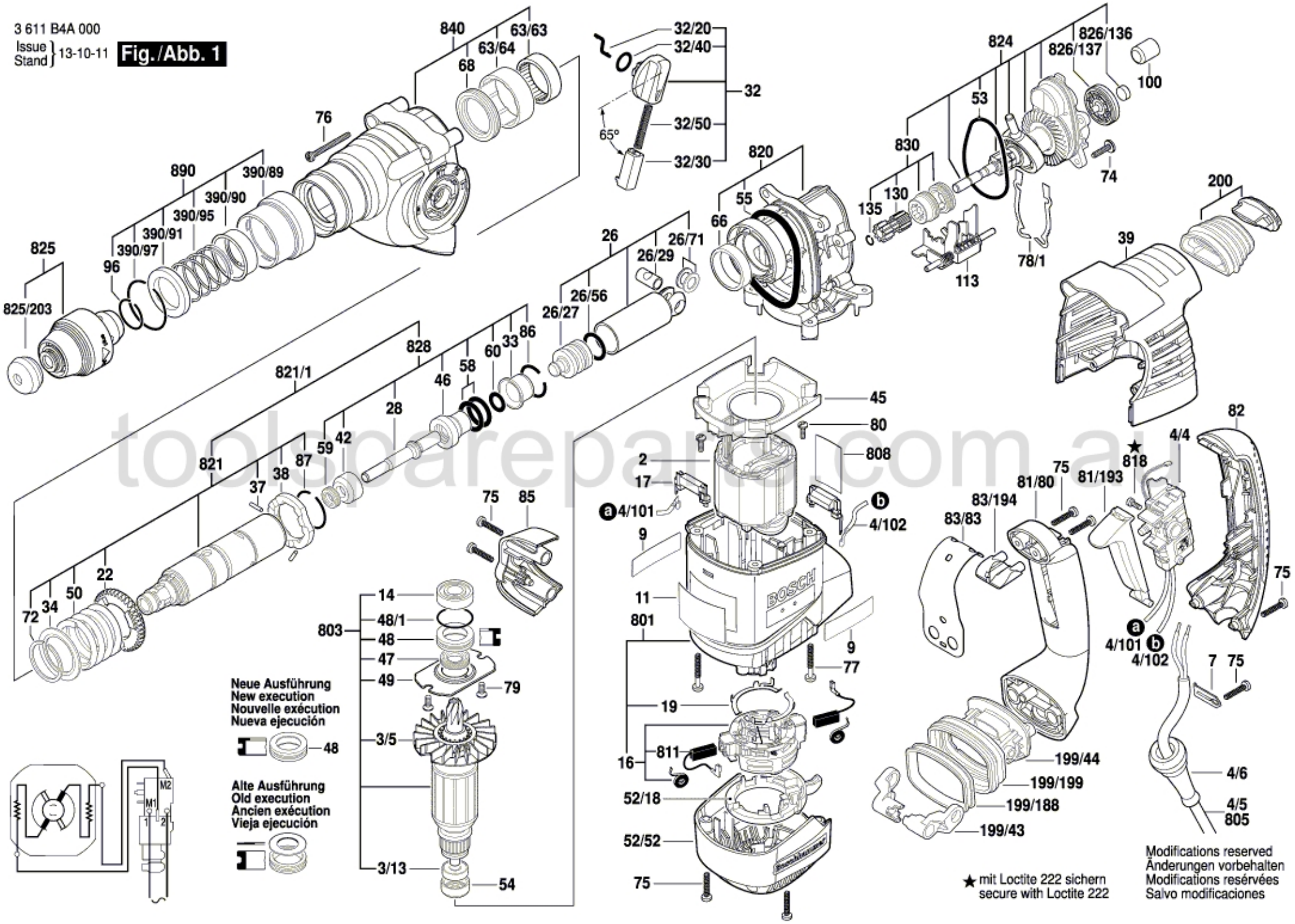

toolspareparts.com.au